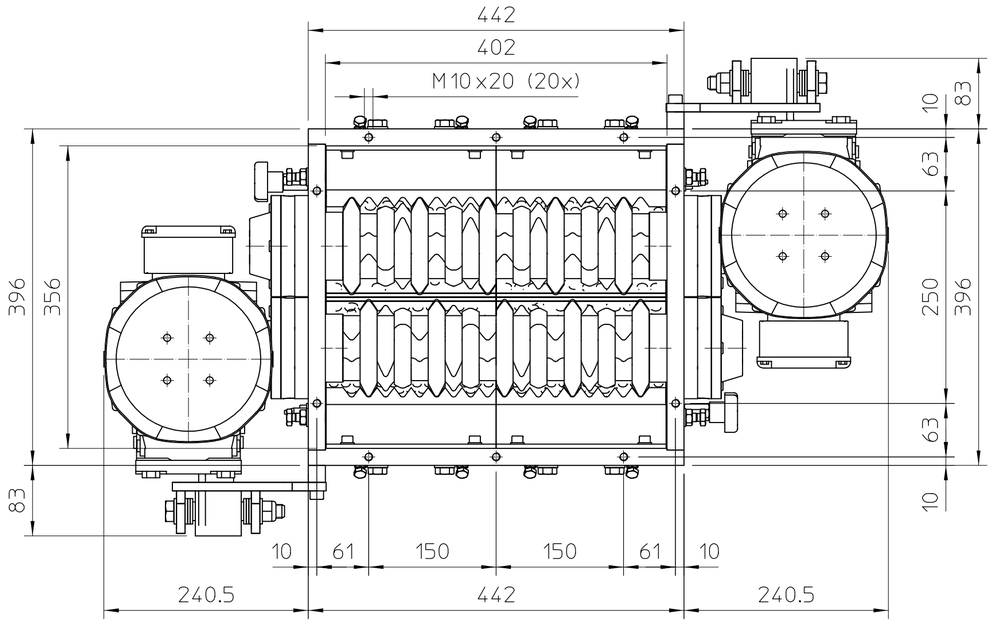

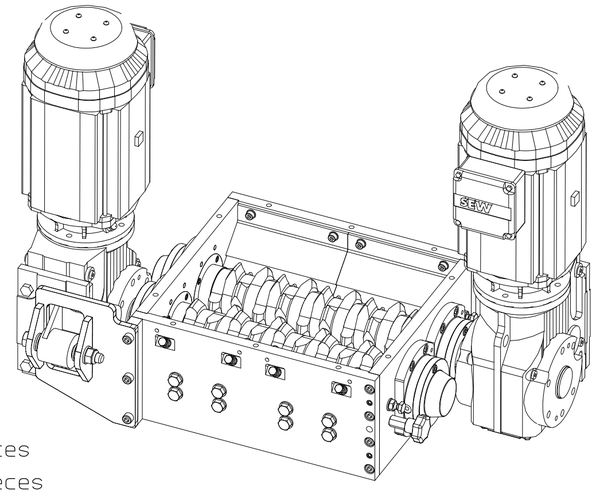

Shredder STS-B24.03_U
- Number of axles : 2 pieces
- Number of knives : 36 pieces
- Transmission : 2 x 3kW
  75 rpm
  400/690V 6,4/3,75A 50Hz
- Screens : holes ø10, ø12, ø14 and ø16mm (to be determined)
- Weight : 250kg
- Color : Frame RAL 7035, motor RAL 5005 (other on request)

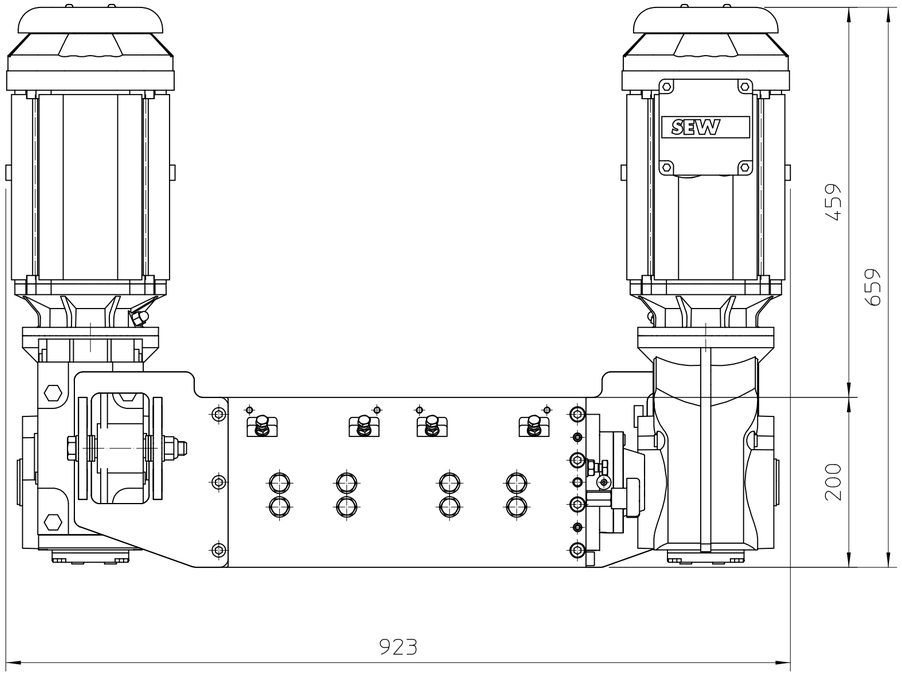

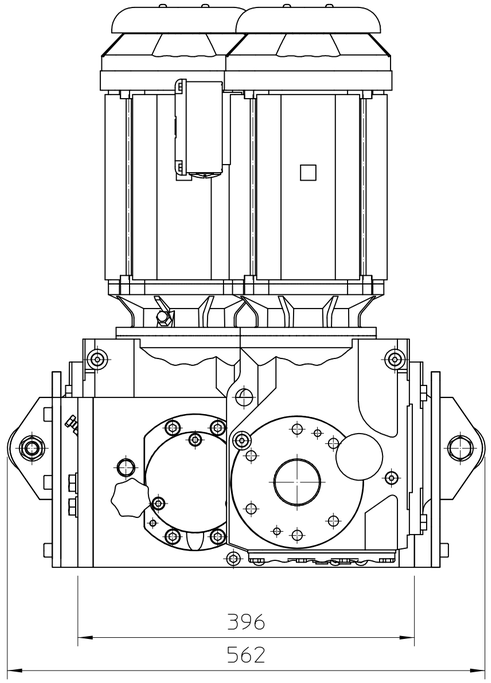

When no tol. stated use :	
0.5- 3	±0.1
> 3- 6	±0.1
> 6- 30	±0.2
> 30- 120	±0.3
> 120- 400	±0.5
> 400- 1000	±0.8
> 1000- 2000	±1.2
> 2000- 4000	±2.0
> 4000-12000	±4.0
>12000-20000	±6.0

REV	DATE	DESIGNER	DESCRIPTION	ENG.APR.	MFG.APR.
-	-	-	-	-	-

Project: –

Title: Shredder STS-B24.03_U

Subtitle: Dimension Drawing

stamach
presses and machinery
STAMACH
De Boeg 11
9206 BB Drachten
Tel: 0031 (0)512-82 00 26
I: www.stamag.nl

Geometric tol. ISO 1101
Roughness tol. ISO 1302
General tol. ISO 2768-1
ISO 2768-2

Customer name:	–
Customer ref.no:	–
Drawn by: WDV	Date: 12-06-2019
Status: DEF	Mass: N/A

Sheet	Scale	Size
2 of 2	1 : 5	A2

Project number	Part number	Rev.
–	STS-B24.03_U	0

Stamach is een onderdeel van Stansz B.V.